AVERE® 3 WASH

COB LOW VOLTAGE

Unique lighting solutions.

c UL us
LISTED
488649

AVID LABS®

WARNING
(Must read below prior to use of this product)

- Use only in ponds and small decorative fountains where persons will immerse no more than their hands and lower arms while the product is energized (Bronze version only).
- DO NOT use in water intended for swimming, wading, immersion, or bathing.
- All installer completed cable connections must be located outside of pond or fountain.
- Low voltage circuit must be supplied by a power unit marked as suitable for supplying submersible luminaires.
- Power unit must be supplied by a circuit protected by a ground fault circuit interrupter (GFCI).

Table of Contents

Introduction 2

Product Description 2

Safety Information 3-8

General Advice 4

Protection from Eye Injury 4

Protection from Electric Shock 5-6

Protection from Fire 6

Protection from Injury And Damage 7

Environmental Advice 7

Functional Advice 8

Technical Information 9

Secure Mounting 10-12

AC Power Connection 13

Warranty 13

Introduction

Congratulations on the purchase of your new AVERE® 3 Wash-COB fixture.

Our company's name is especially apt. We truly are avid designers, engineers and machinists – innovators constantly striving to create the best products possible with the utmost appreciation for clean design and solid execution.

The AVERE® 3 Wash-COB light is proudly built in the U.S.A. from machined aircraft-grade aluminum. Simplicity of use, flexibility, build quality and overall functionality make us confident you made the right choice in lighting fixtures.

Our lighting experts and engineers will consult with you on ways to use our standard products or design custom solutions. Let our team help you create the design you envisioned. **Together we can make great things.**

Joel Nichols, Owner/CEO
AVID Labs, LLC

Product Description

The AVERE® 3 Wash-COB is an IP68, UL Listed
LED fixture designed for ease of use and future compatibility including front board replacement. The fixture is designed for outdoor and underwater use (Bronze version only) in architainment, commercial, retail, residential and architectural environments.

Safety Information

The following symbols are used in this document:

WARNING! Read manual before installation, operation or servicing.
MISE EN GARDE ! *Lire le manuel avant l'installation, de fonctionnement ou de réparer.*

WARNING! Safety hazard. Risk of injury or death.
MISE EN GARDE ! *Danger pour la sécurité. Risque de blessure ou de mort.*

WARNING! Hazardous voltage. Risk of severe or fatal electric shock.
MISE EN GARDE ! *Tension dangereuse. Risque d'électrocution grave, voire mortelle.*

WARNING! Shock hazard. Equipment must be properly grounded.
MISE EN GARDE ! *Risque d'électrocution. Équipement doit être correctement mise à la terre.*

WARNING! Hot surface. Risk of skin burn or skin irritation.
MISE EN GARDE ! *Surface chaude. Risque de brûlures ou d'irritation de la peau.*

WARNING! Fire hazard.
MISE EN GARDE ! *Risque d'incendie.*

WARNING! Light emission. Risk of eye injury.
MISE EN GARDE ! *Émission de lumière. Risque de blessure aux yeux.*

WARNING! Seek Professional Electrical Guidance Prior to Installation

Refer to the Power Supply Unit (PSU) manufacturer's guide for PSU locations, connections, etc. The PSU must be located in a dry location and properly ground in accordance with the manufacturers guidelines and local electrical code.

Safety Information

GENERAL ADVICE

1. Read this manual completely before using the product.
2. Keep this manual with your records for future reference.
3. Follow all instructions printed in this manual, otherwise warranty may become void.
4. Follow all printed security advice on the device.
5. The manufacturer takes no responsibility for injury or damage caused by not following the safety precautions and instructions printed within this manual and on the device.
6. Handle the unit with care. Dropping or heavy vibration may damage the unit mechanically and/or electrically.

PROTECTION FROM EYE INJURY

1. Warning: Depending on the configuration of the device, this device reaches the limits of IEC/EN62471 Group 3 depending upon exposure and chip type.

   Avertissement: Selon la configuration de l'appareil, cet appareil atteint les limites de IEC/EN62471 groupe 3 en fonction de l'exposition et le type de puce.

2. To avoid eye injury, do not look into or at the beam

   Pour éviter les blessures aux yeux, ne regardez pas le faisceau.

3. Do not view the beam directly and limit exposure indirectly. Use protective eyewear when possible due to the high luminous intensity.

   Ne pas regarder le faisceau directement et indirectement limiter l'exposition. Utilisez des lunettes de protection lorsque cela est possible en raison de la forte intensité lumineuse.

Safety Information

PROTECTION FROM ELECTRIC SHOCK

1. Use only in ponds and small decorative fountains where persons will immerse no more than their hands and lower arms while the product is energized. Bronze unit only.

   Utilisez uniquement dans les étangs et les petites fontaines décoratives où les personnes ne plongent pas plus que leurs mains et leurs bas bras tandis que le produit est sous tension. Unité de bronze seulement.

2. DO NOT use in water intended for swimming, wading, immersion, or bathing. Bronze unit only.

   NE PAS utiliser dans l'eau destinée à la baignade, à la pataugeoire, à l'immersion ou au bain. Unité de bronze seulement.

3. All installer completed cable connections must be located outside of pond or fountain. Bronze unit only.

   Toutes les connexions de câbles achevées par l'installateur doivent être situées à l'extérieur de l'étang ou de la fontaine. Unité de bronze seulement.

4. Low voltage circuit must be supplied by a power unit marked as suitable for supplying submersible luminaires. Bronze unit only.

   Le circuit basse tension doit être alimenté par une unité de puissance indiquée comme étant apte à alimenter des luminaires submersibles. Unité de bronze seulement.

5. Power unit must be supplied by a circuit protected by a ground fault circuit interrupter (GFCI).

   L'unité d'alimentation doit être alimentée par un circuit protégé par un interrupteur de défaut à la terre (GFCI)

6. Ensure only UL listed (In North America) constant voltage supplies are used, the supply must output less than 30V DC.

   Assurez-vous que seules les alimentations en tension constantes de l'UL (en Amérique du Nord) sont utilisées, l'alimentation doit produire moins de 30V cc.

7. Note: Aluminum unit is **not** suitable for underwater usage.

Safety Information

PROTECTION FROM ELECTRIC SHOCK

8. When removing the DC power cord ensure the power is off, wiring in to the NEMA box should be performed by a suitably qualified professional.

Lorsque vous retirez le cordon d'alimentation CC, assurez-vous que l'alimentation est coupée, le câblage dans la boîte NEMA doit être effectué par un professionnel qualifié.

9. Do not open the unit for service. The warranty will be void in any case of unauthorized service by the user or other unauthorized persons. UNIT IS NON-USER SERVICABLE.

N'ouvrez pas l'appareil pour réparation. La garantie sera annulée en cas de service non autorisé de la part de l'utilisateur ou d'autres personnes non autorisées. L'UNITÉ EST NON UTILISABLE.

PROTECTION FROM FIRE

1. When possible, avoid placing the unit near sources of heat.

Dans la mesure du possible, évitez de placer l'appareil à proximité de sources de chaleur.

2. When possible maximize distance between this unit and other devices or walls to allow for proper cooling.

Lorsque possible, maximiser la distance entre cette unité et d'autres dispositifs ou murs pour permettre un refroidissement approprié.

3. Allow sufficient air convection in the unit's environment to avoid overheating. Make sure air convection slots are not blocked.
Laisser la convection d'air suffisante dans l'environnement de l'appareil pour éviter une surchauffe. Assurez-vous que les fentes à convection air ne sont pas bloqués.

4. Keep the unit at least 30" (76cm) away from any flammable materials.

Maintenez l'appareil au moins 30" (76cm) de tout matériau inflammable.

Safety Information

PROTECTION FROM INJURY AND DAMAGE

1. Never use any accessories or modifications not authorized by the manufacturer of this unit.

   Ne jamais utiliser des accessoires ou des modifications non autorisées par le fabricant de cet appareil.

2. Choose a location for operation where the unit is protected from vibration and where a fixed mounting position is provided. In case of overhead mounting, follow applicable rigging rules and regulations for rigging safety.

   Choisissez un emplacement pour l'opération où l'appareil est protégé des vibrations et où une position de montage fixe est fournie. En cas de surcharge-montage, suivez le gréement applicable règles et règlements pour le gréement de sécurité.

3. All bolts should be checked for a tight fit prior to use. In addition, every 6 months the bolts should be inspected by a trained person.

   Tous les boulons shoulderstand être vérifiés pour un ajustement serré avant utilisation. En outre, tous les 6 mois, les boulons doivent être inspectés par une personne qualifiée.

4. This unit has no user serviceable parts. If service is required return the unit to the manufacturer for service.

   Cet appareil n'a aucune pièce réparable par l'utilisateur. Si le service il faut retourner l'appareil à le fabricant pour le service.

ENVIRONMENTAL ADVICE

It is highly recommended that North American users follow environmentally safe disposal/recycling practices. Components in the unit comply with ROHS II requirements.

Safety Information

FUNCTIONAL ADVICE

1. Do not hot switch connections, ensure power is off when connecting supplies.
2. Check supply voltage. If unsure contact licensed electrician and/or AVID Labs®
3. Product must be checked by a licensed electrician prior to commission.
4. Where code requires, ducting may be ran to the rear of the unit. The ducting should be installed by a licensed electrician.

CONTROL

1. Standard Fixed Color - the unit has a third line in allowing a PWM signal to be send to the internal drive. This signal controls the dimming of the driver. The driver will run at full power despite voltage drops without a signal. Minimum voltage for the product is 12V.
2. RGBW - 7 Conductor cable,
   Orange Power 24VDC +,
   Blue Power 24DC-,
   Green DMX +,
   White DMX +,
   Red DMX-,
   Black DMX -,
   Drain Wire DMX common.

Minimum voltage for the product is 24V.

LED LIFETIME ADVICE

LED lifetime is determined by the gradually declining brightness of an LED over time where, the point of 70% brightness reduction marks the defined end of its lifetime. The driving factor of this effect is the heat that the chip inside the unit is exposed to. While an LED may reach 100,000 hours under ideal circumstances, the real-world lifetime may be 60,000 hours. This may be less if the LED is exposed to excessive heat, which can be caused by continuously running the LED inside this device at full power and operating the unit in high environmental temperatures. If improving the lifetime of the LED is a concern, keeping the operating temperature lower is advised. This may include forced air external cooling and/or the reduction of overall intensity.

Technical Information

Mains Input	DC 12-24V WHITE, 24V RGBW
Power Consumption	12.5W Max.
Submersion Depth	1.0m Max., (Bronze only)
Power Cord	6' – 120V SJEOW Outdoor Cable
Dimensions WxDxH	3.00" x 2.81" x 5.00" (76.2mm x 71.34mm x 127mm)
Mounting Hole	17⁄32" or Knuckle Mount (optional)
IP Rating	IP68
UL Listed U.S.A. and Canada	E488649

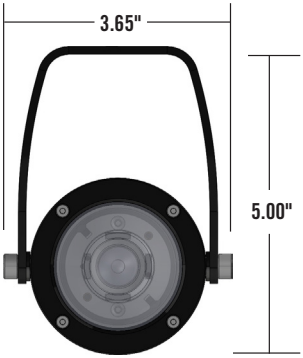

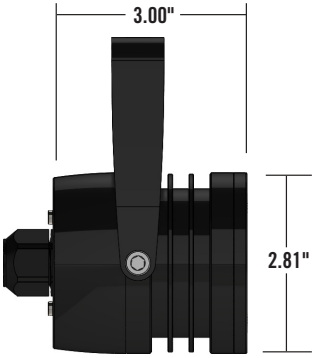

Secure Mounting

MOUNTING

The unit is mounted in one of 2 ways.

1. Yolk mount – Pass a ⅜" stainless steel threaded rod passed through the bolt hole and secure using a nut and washer per the diagram below. The threaded rod should have sufficient chemical and corrosion resistance for the application.

MAX DEPTH 3ft (1M)

WARNING – RISK OF ELECTRIC SHOCK

- Use only in ponds and small decorative fountains where persons will immerse no more than their hands and lower arms while the product is energized.
- DO NOT use in water intended for swimming, wading, immersion, or bathing.
- All installer completed cable connections must be located outside of pond or fountain.
- FOR CHLORINATED PONDS USE STAINLESS STEEL VERSION OF FIXTURE ONLY.

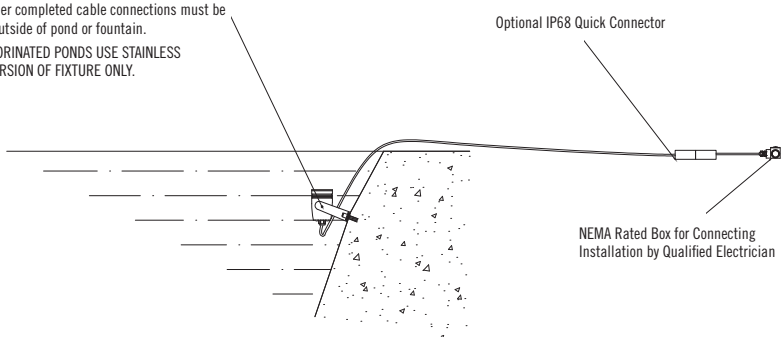

2. Knuckle mount– **<u>For installations above water only.</u>** A knuckle mount with ground spike can be used. Electrical connections are made in a suitable NEMA box either buried or adjacent to the knuckle mount.

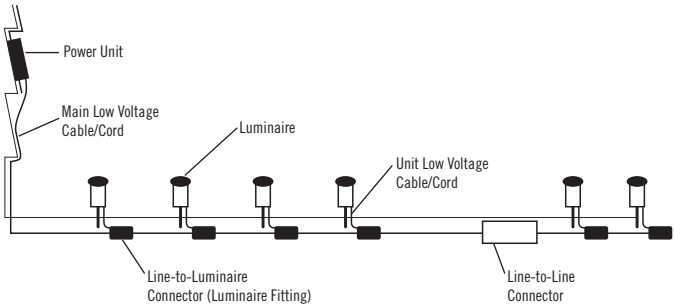

Secure Mounting

HANGING/RIGGING, CEILING MOUNTED OPERATION

RISK OF INJURY: Mounting requires extensive experience, including, among others, calculating working load limits, good knowledge of the installation material being used, and periodic safety inspection of all installation material and the unit. If you lack such qualifications, do not attempt the installation yourself. Improper installation can result in injury. Be sure to complete all rigging and installation procedures before applying power to the unit.

RISQUE DE BLESSURES: *Le montage requiert une grande expérience, y compris, entre autres, calcul des limites de charge de travail, la bonne connaissance du matériel installation utilisé et inspection périodique sur la sécurité de tous les matériels d'installation et de l'unité. Si vous n'avez pas ces qualifications, ne tentez pas l'installation vous-même. Une installation incorrecte peut causer des blessures. N'oubliez pas de remplir toutes les procédures de montage et d'installation avant la mise sous tension de l'appareil.*

- The unit should be installed out of reach of people and outside of areas where persons may walk by or be seated.

  L'appareil doit être installé de rejoindre des gens et en dehors des zones où les personnes peuvent marcher ou s'assis.

- Make sure that the installation area can hold a minimum point load of 5 times the unit's weight or appropriate structural design has taken place by a certified engineer.

  Assurez-vous que la zone de montage peut supporter une charge minimale de point de poids de 5 fois l'unité ou de la conception structurelle appropriée a eu lieu par un ingénieur certifié.

- When mounting the unit to truss, buildings or any structure, be sure to secure using appropriately rated hardware and where applicable structural design should be completed.

  Lors du montage de l'unité à poutre en treillis, être sûr d'obtenir l'aide du matériel de manière appropriée nominale.

- All bolts should be checked for a tight fit prior to use. In addition, every 6 months the bolts should be inspected by a trained person.

  Tous les boulons shoulderstand être vérifiés pour un ajustement serré avant utilisation. En outre, tous les 6 mois, les boulons doivent être inspectés par une personne qualifiée.

Secure Mounting

- Never stand directly below the device when mounting, removing, or servicing the fixture.

  Ne vous tenez pas directement sous l'appareil lors du montage, retrait ou entretien de l'appareil.

- The installation should be inspected every 6 months or more frequently if deemed necessary. Inspection should be performed by a skilled person to ensure safety.

  L'installation devrait être inspecté tous les 6 mois ou plus fréquemment s'il le juge nécessaire. Inspection doit être effectuée par une personne compétente pour assurer la sécurité.

AC Power Connection

- Main power supply selected should have suitable grounding means and be UL approved.
- Connections in to the Power supply must be made by a qualified electrician who should as a minimum fit a GFCI.

Low Voltage Connections

Output voltage must not exceed 30V and total power supplied to circuit must be less than 300Watts, for cable max amperage see table below:

Wire Gauge (AWG)	18	16	14	12	10
SI equivalent, mm^2 sectional area	0.82	1.3	2.1	3.3	5.3
	Ampacity (amperes)				
	7 amps (10)	10 amps (13)	15 amps (18)	20 amps (25)	25 amps (30)

- Voltage drop will occur and must be considered in the design, please contact AVID Labs® with design installation questions or for additional cable lengths.
- Connections must be made when mains power is disconnected.
- Connections should be made into a suitably rated NEMA box by a qualified electrician. Connections to the box should be made outside of any water.
- The minimum cable length from the fixture in to the box should be 2', the maximum length is 6', where an AVID Labs® approved sealed connector is placed in-line from the unit to NEMA box. The connector should be checked to ensure it is properly connected. Any connections/disconnection must be made outside of the water.
- All wiring must meet national and local electrical code.

ADDITIONAL LOW VOLTAGE CABLES

To order additional cable lengths contact AVID Labs® or visit AVIDLabs.com. Please ensure your design has been checked by a qualified electrician prior to installation.

Warranty

Items are covered for defects in materials and workmanship for five years, including repair parts and repair labor on defective item, from date of the manufacturer invoice. The warranty covers freight for 30 days after initial purchase. The manufacturer does not cover any other loss resulting from product failure. Products being returned for warranty repair must display the original serial number. Removal of the serial number voids the product's limited warranty.

AVERE® 3 WASH

COB LOW VOLTAGE

c UL us
LISTED
488649

AVID LABS®

4121 Fourier Road • Fort Wayne, IN 46818
260.969.9225
AVIDLabs.com

MADE IN U.S.A.
Designed, Engineered and Built

© Copyright 2017 AVID Labs, LLC
2/17